18 Watt 1974X
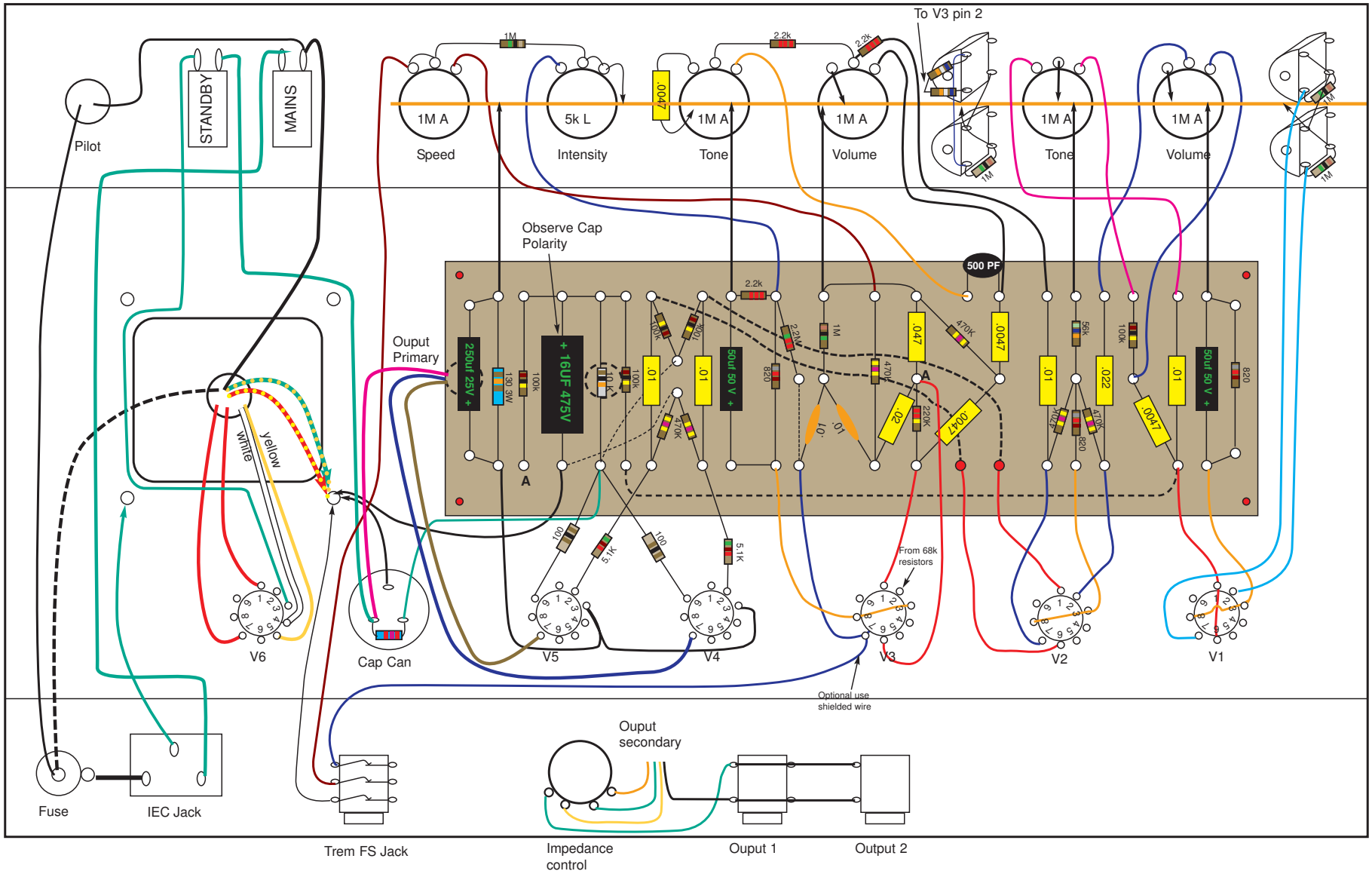
SDG VINTAGE